CVB Release 3 Installation Doc

Introduction

Connected Vehicle Blueprint can be flexibly deployed in physical machines, virtual machines, containers and other environments.

TARS framework is an important open source component of Connected Vehicle Blueprint, which can efficiently complete the massive deployment and governance of micro-services.

License

How to use this document

The document includes details of prerequisites /pre-installation, installation and uninstalls steps.

The prerequisites and pre-installation software and hardware should be ready before executing the installation steps.

Deployment Architecture

Due to the hardware source limitation, Connected Vehicle Blueprint is deployed in three Virtual Machines in Amazon Web Service.

(Visit CI Lab Environment Setup if you want to set up connected vehicle blueprint in CI Lab.)

The following picture depicts the deployment architecture.

Node-0: Deploy Jenkins Master.

Node-1: Deploy Tars Master Node.

Node-2: Deploy Tars Slave(Node) and the connected vehicle applications.

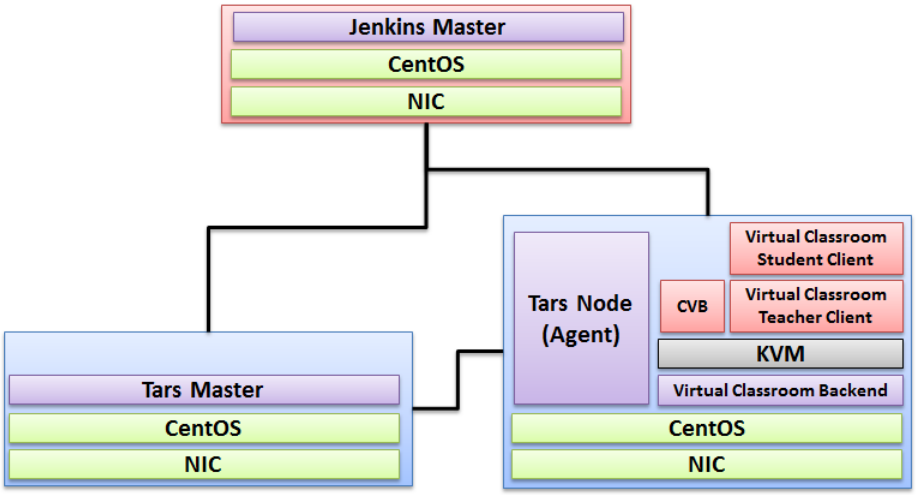

Pre-Installation Requirements

Hardware Requirements

Minimum Hardware Requirements

Hostname	Core	RAM	HDD	NIC	Role
Node-0	8	16GB	50GB	1GB	Jenkins Master
Node-1	8	16GB	50GB	1GB	Tars Framework
Node-2	8	16GB	100GB	1GB	Tars Node (CVB + Type4 Application + Virtual Classroom Teacher Client + Virtual Classroom Student Client)

Recommended Hardware Requirements

Hostname	Core	RAM	HDD	NIC	Role
Node-0	8	32GB	2TB	1GB	Jenkins Master
Node-1	8	48GB	2TB	1GB	Tars Framework
Node-2	8	48GB	2TB	1GB	Tars Node (CVB + Type4 Application + Virtual Classroom Teacher Client + Virtual Classroom Student Client)

Software Prerequisites

- CentOS 8
- MySQL Ver 14.14 Distrib 5.6.26
- OpenStack: Rocky
- k8s:1.15.0

Database Prerequisites

N/A

Other Installation Requirements

N/A

Installation High-Level Overview

Upstream Deployment Guide

Installation Step by Step

Step1: Install Jenkins

Refer to the following link for installing Jenkins Mater and connect to Jenkins Slave.

https://github.com/qiuxin/Connected-Vechicle/blob/master/Doc/CI_Environment_Setup.md

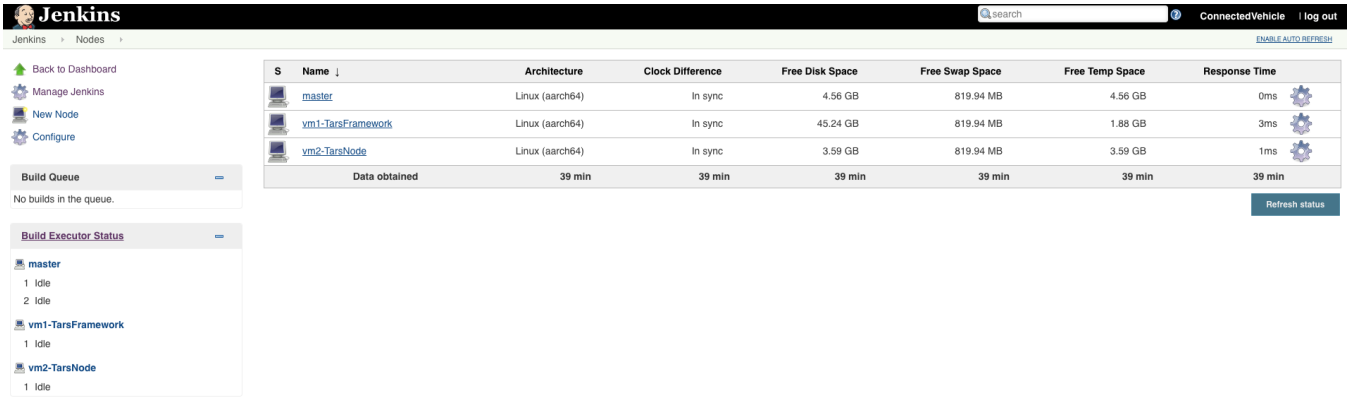

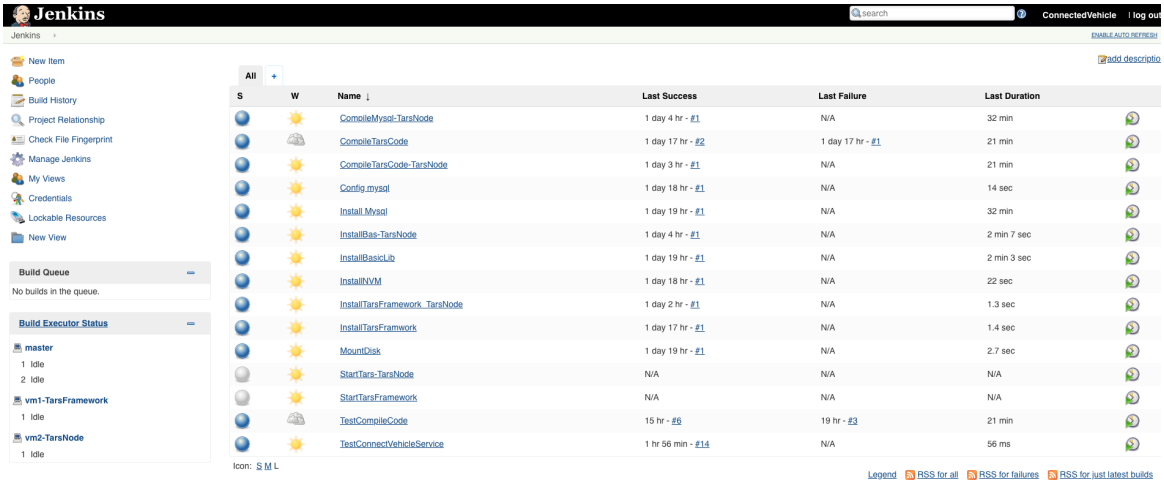

Step2: Install Tarsframework

Refer to the following link for installing Tarsframework.

https://tarscloud.github.io/TarsDocs_en/installation/source.html

1. Dependency install

yum install -y glibc-devel gcc gcc-c++ bison flex make cmake psmisc ncurses-devel zlib-devel openssl openssl-devel

install mysql
wget -i -c http://dev.mysql.com/get/mysql57-community-release-el7-10.noarch.rpm
yum -y install mysql57-community-release-el7-10.noarch.rpm
yum -y install mysql-community-server
yum -y install mysql-devel

If you have problems to install mysql with the above step, add the new mysql repository to local server with this yum command and then re-run the previous commands.

sudo yum localinstall https://dev.mysql.com/get/mysql57-community-release-el7-10.noarch.rpm

```
yum install mariadb-server -y

## Configure mysql
systemctl start mariadb.service
systemctl enable mariadb.service
systemctl status mariadb.service
mysql -u root -p

grep "password" /var/log/mariadb/mariadb.log

ALTER USER 'root'@'localhost' IDENTIFIED BY '${your passwd}';
flush privileges;
```

2. Install develop environment for Tars

```
yum install -y npm
npm i -g pm2

wget -qO- https://raw.githubusercontent.com/creationix/nvm/v0.33.11/install.sh | bash
source ~/.bashrc

nvm install v8.11.3
npm install -g pm2 --registry=https://registry.npm.taobao.org

mkdir Tars
cd Tars
git clone https://github.com/TarsCloud/TarsFramework.git --recursive
cd TarsFramework/build
chmod u+x build.sh
./build.sh prepare
./build.sh all

###Recompile if needed.###

./build.sh cleanall
./build.sh all
```

Change to user root and create the installation directory.

```
cd /usr/local
mkdir tars
mkdir app
chown ${normal user}:${normal user} ./tars/
chown ${normal user}:${normal user} ./app/

cd
cd Tars/TarsFramework/build/
./build.sh install or make install
```

The default install path is /usr/local/tars/cpp
If you want to install on different path:

modify tarscpp/CMakeLists.txt
modify TARS_PATH in tarscpp/servant/makefile/makefile.tars
modify DEMO_PATH in tarscpp/servant/script/create_tars_server.sh

3.Tars framework Installation

3.0 Firewall setup

```
firewall-cmd --zone=public --permanent --add-service=http
firewall-cmd --add-port 3000/tcp
firewall-cmd --add-port 3001/tcp
firewall-cmd --add-port 3306/tcp
```

3.1. Add user

```
mysql -u root -p
grant all on *.* to 'tarsAdmin'@'%' identified by 'Tars@2019' with grant option;
grant all on *.* to 'tarsAdmin'@'172.22.195.10' identified by 'Tars@2019' with grant option;
grant all on *.* to 'tarsAdmin'@'Node-1' identified by 'Tars@2019' with grant option;
flush privileges;
```

3.2 setup mysql privileges

mysql -u root -p
>use mysql
>select Host from user where User='root';
if shown as “localhost”we can update as follwing command

>update user set host = '%' where user ='root';
>FLUSH PRIVILEGES;
'%'update to the host IPand then use mysql -u root -p --host '%ip' change back'%'

cd /Tars
git clone https://github.com/TarsCloud/TarsWeb.git
mv TarsWeb web
cp -rf web /usr/local/tars/cpp/deploy/
cd /usr/local/tars/cpp/deploy
chmod a+x linux-install.sh
./linux-install.sh MYSQL_HOST MYSQL_ROOT_PASSWORD INET REBUILD(false[default]/true) SLAVE(false[default]/true)
./linux-install.sh 192.168.1.10 our_PW eno1 false false admin 3306

The following is the picture for Tars Framework website.

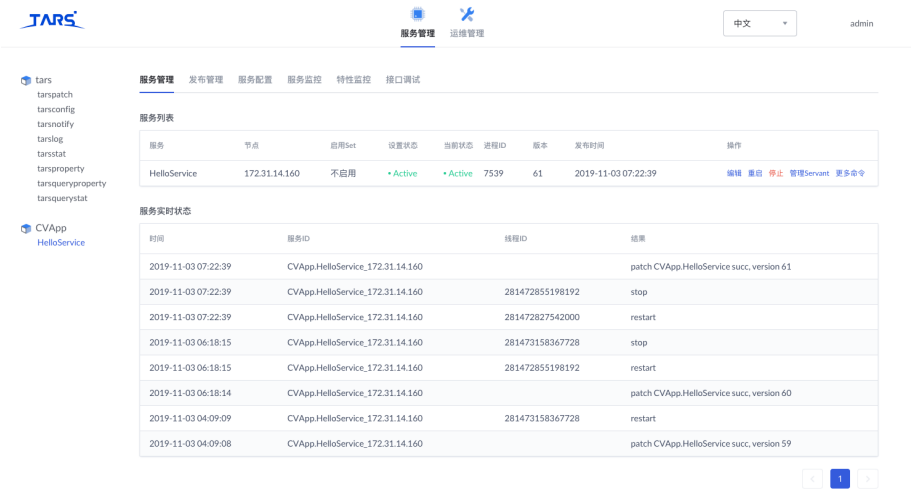

Step3: Tars Node

Refer to the following link for installing Tarsnode and connect Tarsnode to Tarsframework.

https://tarscloud.github.io/TarsDocs_en/installation/source.html

Step4: Launch CI jobs

Create CI jobs and launch CI jobs in the following way.

The detail of the Jenkins script is depicted in the Test Document.

CVB Test Doc for R3

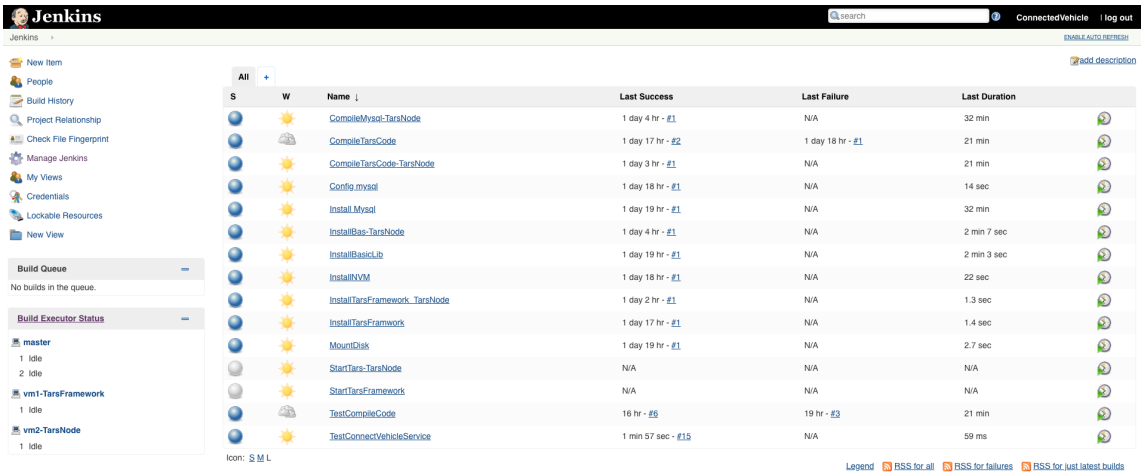

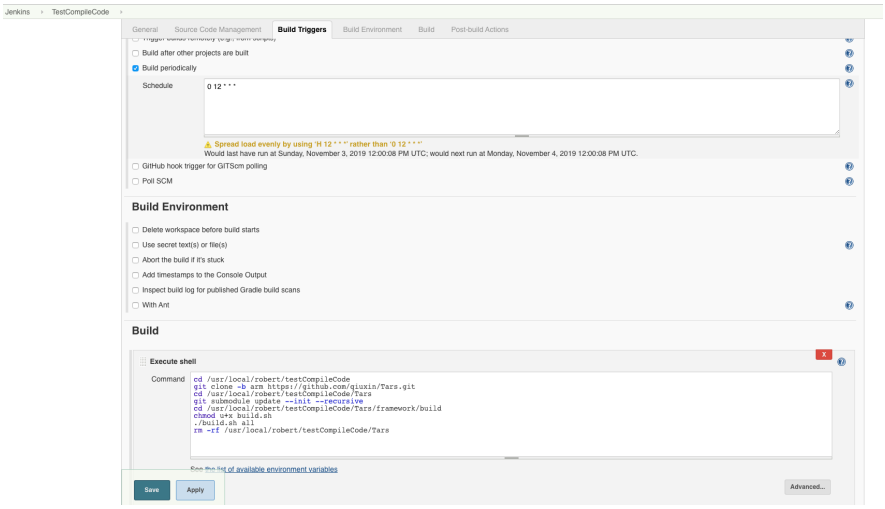

Verifying the Setup

N/A

Developer Guide and Troubleshooting

Uninstall Guide

1. Stop all tars processes

   /usr/local/app/tars/tars-stop.sh

2. Delete files

   rm -rf /usr/local/app/tars

   rm -rf /usr/local/app/patchs

   rm -rf /usr/local/app/web

rm -rf /usr/local/tars

3. Delete crontab

   crontab -e

   Delete this line " * * * * * /usr/local/app/tars/tarsnode/util/monitor.sh "

Troubleshooting

1. You can't deploy service on IP 127.0.0.1 for the following reasons:
   a)Each service has at least one obj to serve foreign clients;
   b)Each service has a obj for administration, it binds to ip 127.0.0.1 and the same port which servant obj binds to.

2. After executing of tars_start.sh, please execute command ps -ef|grep tars to check that the core service processes of Tars are alive, i.e., tarsregistry, tarsAdminRegistry, tarsnode, tarsconfig and tarspatch.

3. The paths in which services deployed as below:
   a)Log file path: /usr/local/app/tars/app_log/${Application}/${ServiceName}/, such as /usr/local/app/tars/app_log/Test/HelloServer/
   b)Executable file path: /usr/local/app/tars/tarsnode/data/${Application}.${ServiceName}/bin/, such as /usr/local/app/tars/tarsnode/data/Test.HelloServer/bin/
   c)Template config file path: /usr/local/app/tars/tarsnode/data/${Application}.${ServiceName}/conf/, such as /usr/local/app/tars/tarsnode/data/Test.HelloServer/conf/
   d)Cache file path: /usr/local/app/tars/tarsnode/data/${Application}.${ServiceName}/data/, such as /usr/local/app/tars/tarsnode/data/Test.HelloServer/data/

4. How to check logs
   For example, there will be a log file named Test.HelloServer.log in directory /usr/local/app/tars/app_log/Test/HelloServer/. If something failed, please check it.

5. tarsnode can not run java server: cannot execute java
   Please restart tarsnode after install jdk
   /usr/local/app/tars/tarsnode/util/start.sh

Maintenance

Blueprint Package Maintenance

Frequently Asked Questions

N/A

License

References

N/A

Definitions, acronyms and abbreviations

N/A