CVB Release 3 Test Doc

Introduction

This document covers Test Deployment Environment and Test Case Result for Enterprise Applications on CVB Blueprint.

The topology in this release for this version includes 3 CentOs 8.0 Physical Machine node .

Akarino Test Group Information

N/A

Overall Test Architecture

Test architecture/topology

The test environment consists of three virtual machines in total.

- one physical server for Jenkins CI.
- one physical server for TarsFramework and Jenkins slave
- one physical server for TarsNode and Jenkins slave.

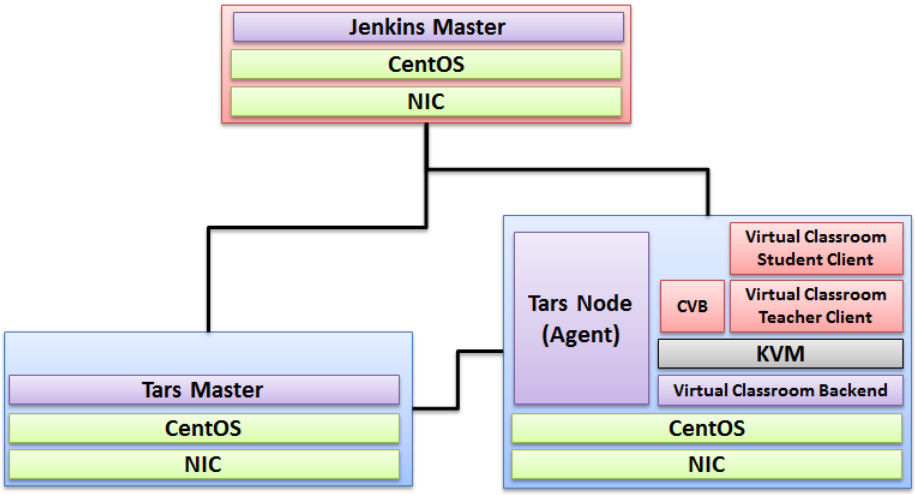

Software Version

OpenStack: Rocky

k8s:1.15.0

Java:

openjdk version "1.8.0_232"
OpenJDK Runtime Environment (build 1.8.0_232-b09)
OpenJDK 64-Bit Server VM (build 25.232-b09, mixed mode)

Jenkins: Ver 2.190.2

CentOS 7

Mysql Ver 14.14 Distrib 5.6.26, for Linux

Devices Under Test

Hostname	Core	RAM	HDD	NIC	Role
Node-0	8	40GB	3TB	1GB	Jenkins Master
Node-1	8	96GB	3TB	1GB	Tars Framework
Node-2	8	96GB	3TB	1GB	Tars Node (CVB + Type4 Application + Virtual Classroom Teacher Client + Virtual Classroom Student Client)

Test Script

The test is to fulfill by Jenkins Job. The test script includes:

- Compile the Tars Framework

> *cd /usr/local/robert/testCompileCode*

> *git clone -b arm https://github.com/qiuxin/Tars.git*

> *cd /usr/local/robert/testCompileCode/Tars*

> *git submodule update --init --recursive*

> *cd /usr/local/robert/testCompileCode/Tars/framework/build*

> *chmod u+x build.sh./build.sh all*

> *rm -rf /usr/local/robert/testCompileCode/Tars*

- Call the service deployed by Tars Framework

> */usr/local/testClient/CVAppClient*

The log is triggered periodically.

The log is updated to

https://nexus.akraino.org/content/sites/logs/tencent/job/TestCompileCode/

https://nexus.akraino.org/content/sites/logs/tencent/job/TestConnectVehicleService/

https://nexus.akraino.org/content/sites/logs/tencent/job/CD_Install_Tars/

BluVal Testing

1.bluval installation

mkdir demo
cd demo
mkdir results
git clone https://gerrit.akraino.org/r/validation.git
cd validation
vi tests/variables.yaml ## update k8s related ip. due to this bp do not use k8s , we don't need to change.

vi bluval/volumes.yaml

```
volumes:
# location of the ssh key to access the cluster
ssh_key_dir:
local: '/home/thorking/.ssh/'
target: '/root/.ssh/'
# location of the k8s access files (config file, certificates, keys)
kube_config_dir:
local: '/home/thorking/demo/.kube/'
target: '/root/demo/.kube/'
# location of the customized variables.yaml
custom_variables_file:
local: '/home/thorking/demo/validation/tests/variables.yaml'
target: '/opt/akraino/validation/tests/variables.yaml'
# location of the bluval-<blueprint>.yaml file
blueprint_dir:
local: '/home/thorking/demo/validation/bluval'
target: '/opt/akraino/validation/bluval'
# location on where to store the results on the local jumpserver
results_dir:
local: '/home/thorking/demo/results'
target: '/opt/akraino/results'
# location on where to store openrc file
openrc:
local: '/home/thorking/openrc'
target: '/root/openrc'
```

vi bluval/bluval-iec-type4.yaml

```
blueprint:
name: iec-type4
layers:
- os
- docker

os: &os
-
name: lynis
what: lynis
optional: "False"
-
name: vuls
what: vuls
optional: "False"

k8s: &k8s
-
name: conformance
what: conformance
optional: "False"
-
name: kube-hunter
what: kube-hunter
optional: "False"
```

./bluval/blucon.sh -l os iec-type4

```
================================================================================
Debug: /opt/akraino/results/os/vuls/debug.log
Output: /opt/akraino/results/os/vuls/output.xml
Log: /opt/akraino/results/os/vuls/log.html
Report: /opt/akraino/results/os/vuls/report.html
```

2. Troubleshooting
##Iptable issues for centOS8
vi /etc/firewalld/firewalld.conf
in config file change
FirewallBackend=nftables
on
FirewallBackend=iptables
save change and reload firewalld
systemctl restart firewalld.service

Test API description

N/A

Test Dashboards

Single pane view of how the test score looks like for the Blue print.

Total Tests	Test Executed	Pass	Fail	In Progress
1	1	1	0	0

Additional Testing

Lynis Report

Lynis log : cvb_lynis.log

Vuls Report

vuls log : cvb_vuls.log

Bottlenecks/Errata

N/A